MICROTRAC
a VERDER company



SPRAY PARTICLE & SPRAY DROPLET SIZE ANALYZER

AEROTRAC II

© Microtrac Retsch GmbH - www.microtrac.com
Content may be subject to modifications or corrections

The AEROTRAC II is an analyzer for particle size distributions & concentration ratio analysis (calculated from transmitted laser light) for suspended particulates in air such as atomized droplets, powders, spray particles, mist and etc.



Click to view video

Product Video

SPRAY PARTICLE & SPRAY DROPLET SIZE ANALYZER AEROTRAC II

PRODUCT ADVANTAGES

- Wide range of applications
- Measurement modes to support various applications
- Key start (manual operation via keyboard)
- Auto start (automatically starts when detecting scattered light from particulates)
- Measurement start via external signal input
- 0.02msec～ Accurate particulate analysis at short measurement intervals
- Provided with multiple scattering correction software as standard
- The instrument can be set up in a limited space
- Equipped with a semiconductor laser

MEASUREMENT EXAMPLES

ANALYSIS OF TEMPORAL CHANGE OF SPRAY MIST

© Microtrac Retsch GmbH - www.microtrac.com
Content may be subject to modifications or corrections

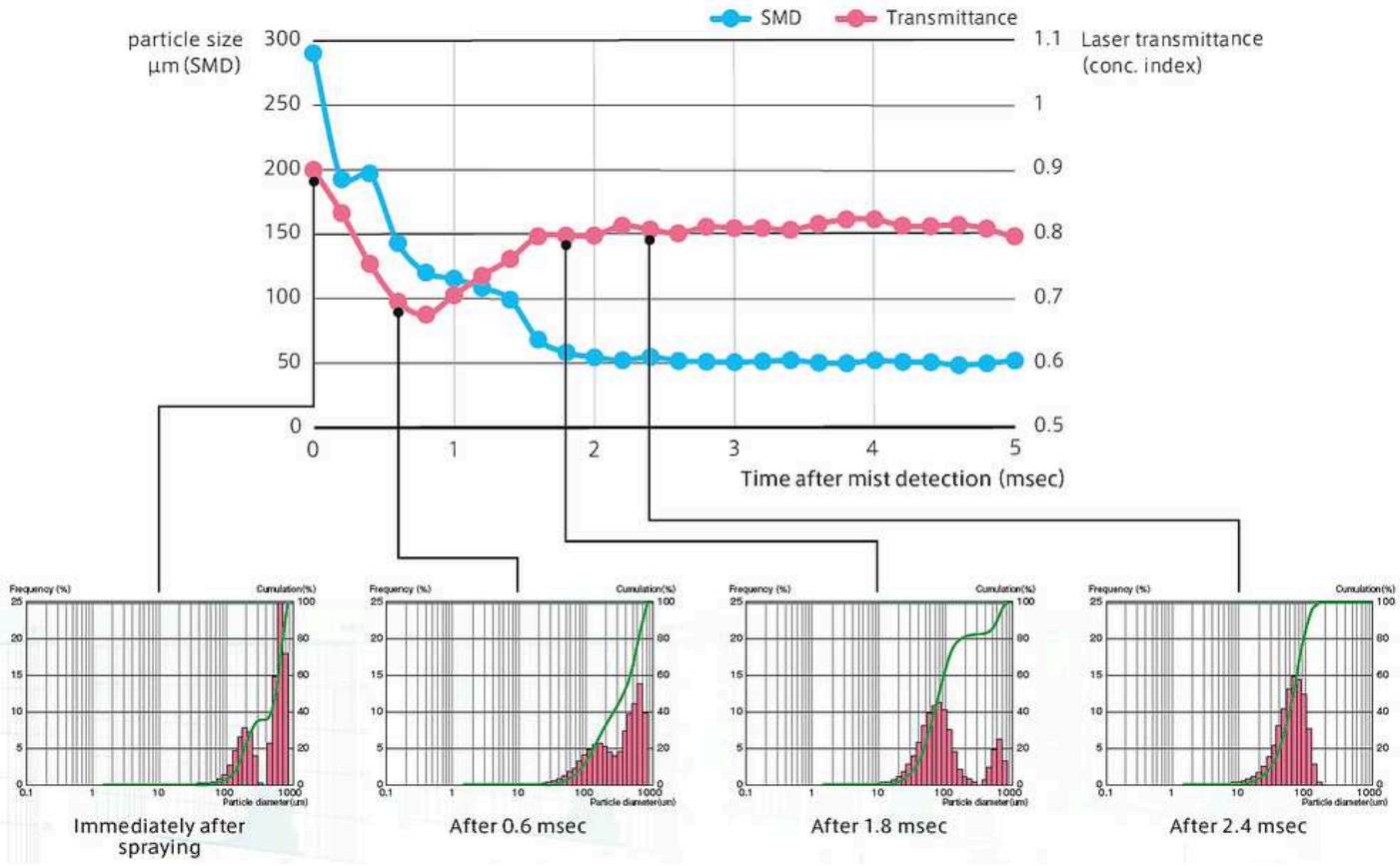

© Microtrac Retsch GmbH - www.microtrac.com
Content may be subject to modifications or corrections

SPRAY PARTICLE & SPRAY DROPLET SIZE ANALYZER AEROTRAC II

ACCESSORIES AND OPTIONS

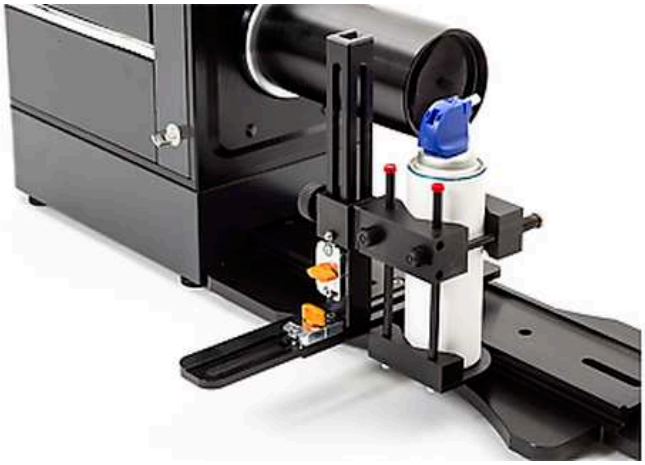

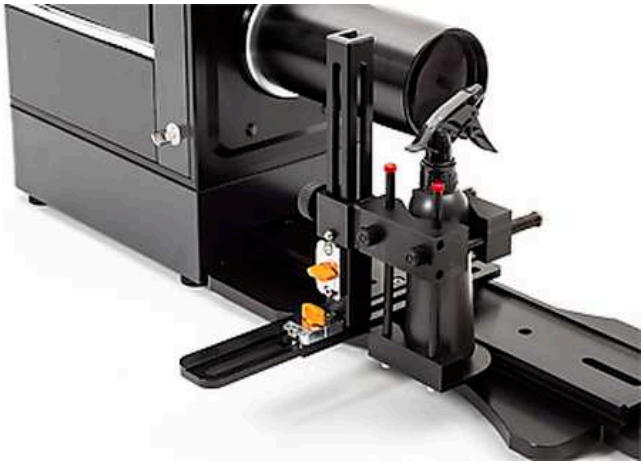

Fixing jigs to support various types of sprays



Wet measurement using a batch cell

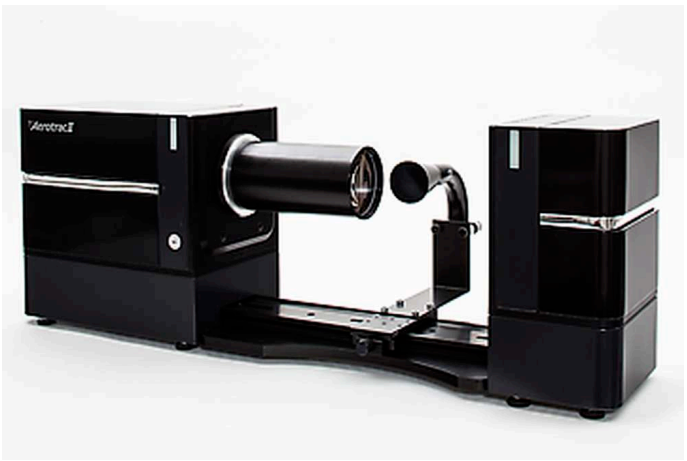

Dry measurement

© Microtrac Retsch GmbH - www.microtrac.com
Content may be subject to modifications or corrections

TYPICAL APPLICATIONS

AEROTRAC II can be used in a wide variety of fields, including droplets from injectors, nebulizers, insecticides, lotions, humidifiers, mist separators, powder paint and various powders.



pigments



lotions



powders

To find the best solution for your particle characterization needs, visit our application database

© Microtrac Retsch GmbH - www.microtrac.com
Content may be subject to modifications or corrections

SPRAY PARTICLE & SPRAY DROPLET SIZE ANALYZER AEROTRAC II

TECHNICAL DATA

Measurement principle	Laser diffraction
Measuring range	F100 lens: 0.5 to 350 µm F300lens: 1.4 to 1000 µm F600 lens: 2.8 to 2000 µm
Light source	Semiconductor laser Wavelength: 635 nm Output: 3.5 mW Laser class: CLASS 3R
Detector	32-element ring detector (with automatic optical axis adjustment function
Measuring time	Spray measurement: 0.02 to 500 msec Continous measurement: 1 to 600 sec
Number of measurements	Spray measurement: 1 to 100 times Continous measurement: 1 to 9,999 times
Data	Particle size distribution (frequency/cumulation), summary data (D50% particle size, SMD, mode diameter etc.) density index
Sample Cell	Material: Tempax glass (with coating) Capacity: 5 to 7 ml
Environmental conditions	Ambient temperature: 10 to 35 °C Ambient humidity: 20 to 80% R.H. (no condensation)
Power requirements	85 to 264 VAC, 47 to 63 hz
Dimensions (W x H x D)	Light emission module: 170 × 230 × 240 mm Detection module: 595 × 230 × 240 mm For connected modules (option): 1000 × 230 × 340 mm, 27 kg
Weight	Light emission module: 5.5 kg Detection module: 11.5 kg (with F300 lens attached) For connected modules (option): 27 kg
Operating unit	Windows PC (including laptop PC)

www.microtrac.com/aerotrac-ii

© Microtrac Retsch GmbH - www.microtrac.com
Content may be subject to modifications or corrections